	KGBU1510
	15
	2
7.5	1
	70
	9.0
	1.5

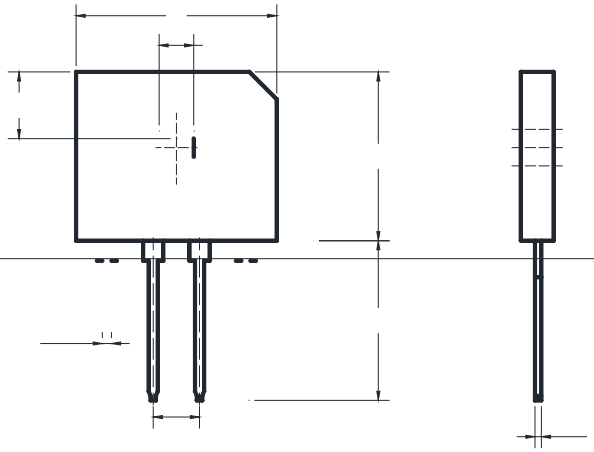

Dimensions in millimeters